Service Manual

Microwave Oven

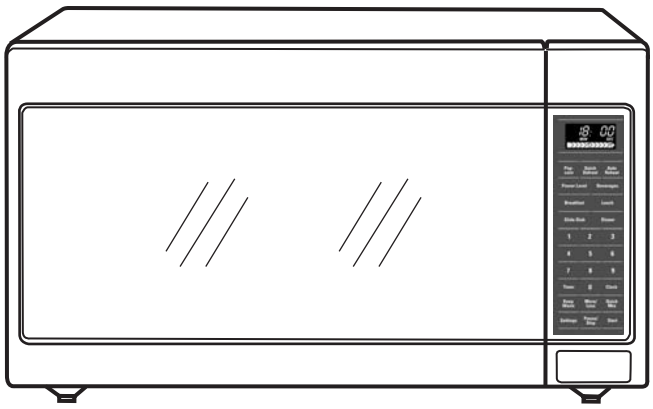

BOSCH:

HMB5050 (STAINLESS)
HMB5060 (BLACK)
HMB5020 (WHITE)

SIEMENS:

HF35M630 (BLACK)

Thermador:

MBES (STAINLESS)
MBEB (BLACK)
MBEW (WHITE)

GAGGENAU:

BM 281-610 (STAINLESS)
BM 281-630 (ALUMINUM)

BOSCH / SIEMENS / Thermador® | An American Icon™ / GAGGENAU

IMPORTANT SAFETY NOTICE

The information in this service guide is intended for use by individuals possessing adequate backgrounds of electrical, electronic, and mechanical experience. Any attempt to repair a major appliance may result in personal injury and property damage. The manufacturer or seller cannot be responsible for the interpretation of this information, nor can it assume any liability in connection with its use.

WARNING

To avoid personal injury, disconnect power before servicing this product. If electrical power is required for diagnosis or test purposes, disconnect the power immediately after performing the necessary checks.

RECONNECT ALL GROUNDING DEVICES

If grounding wires, screws, straps, clips, nuts, or washers used to complete a path to ground are removed for service, they must be returned to their original position and properly fastened.

B/S/H Consumer Products
Technical Service Guide
Copyright © 2006
All rights reserved. This service guide may not be reproduced in whole or in part in any form without written permission from the B/S/H Home Appliance Corporation.

⚠ WARNING

This service information is designed for experienced repair technicians only and is not designed for use by the general public. It does not contain warnings or cautions to advise non-technical individuals of potential dangers in attempting to service a product.
Products powered by electricity should be serviced or repaired only by experienced professional technicians. Any attempt to service or repair the product or products dealt with in this service information by anyone else could result in serious injury or death.

WARNING

1. This product should be serviced only by trained, qualified personnel.
2. Though this product has been manufactured in compliance with:
   "Federal Performance Standard 21 CFR Subchapter J"(D.H.H.S): U.S.A. models
   or "Radiation Emitting Devices Act"(Health and Welfare Canada): Canadian models
   it is very important all repairs should be made in accordance with procedures described in this manual to avoid being exposed to excessive microwave radiation.
3. Check for radiation leakage before and after every servicing according to the "procedure for measuring radiation leakage."
4. If the unit cannot be repaired on site, advise the customer not to use until unit is repaired.
5. Any serviceman who learns of any accident pertaining to microwave radiation leakage including the oven operating with open door should immediately notify the appropriate address listed below and Center for Devices and Radiological Health, DHHS.

Customer service
Bosch Customer service 1-800-944-2094
Thermador Customer service 1-800-735-4328
Gaggenau Customer service 1-800-828-9165
Siemens Customer service 1-800-735-2094

Technical Service
Bosch/Gaggenau Technical Assistance 1-888-522-6724
Thermador Technical Assistance 1-800-444-9091

B/S/H Home Appliances Corporation
5551 McFadden Avenue
Huntington Beach, CA. 92649

6. There are special components used in the microwave oven which are important for safety. These parts are marked with a ⚠ on the replacement parts list. It is essential that these critical parts should be replaced only with the manufacture's specified parts to prevent microwave leakage, shock, fire, or other hazards. Do not modify the orginal design.

PRECAUTIONS TO BE OBSERVED BEFORE AND DURING SERVICING TO AVOID POSSIBLE EXPOSURE TO EXCESSIVE MICROWAVE ENERGY

(A) Do not operate or allow the oven to be operated with the door open.
(B) Make the following safety checks on all ovens to be serviced before activating the magnetron or other microwave source, and make repairs as necessary:
   (1) Interlock operation
   (2) Proper door closing
   (3) Seal and sealing surfaces (arcing, wear, and other damage)
   (4) Damage to or loosening of hinges and latches.
   (5) Evidence of dropping or abuse
(C) Before turning on microwave power for any service test or inspection within the microwave generating compartments, check the magnetron, waveguide or transmission line, and cavity for proper alignment, integrity and connections.
(D) Any defective or misadjusted components in the interlock, monitor, door seal, and microwave generation and transmission systems shall be repaired, replaced, or adjusted by procedures described in this manual before the oven is released to the owner.
(E) A microwave leakage check to verify compliance with the Federal Performance Standard should be performed on each oven prior to release to the owner.

CAUTION

About lead free solder (PbF)

Distinction of PbF PCB: PCBs (manufactured) using lead free solder will have a PbF stamp on the PCB.

Caution:
- Pb free solder has a higher melting point than standard solder; Typically the melting point is 30 - 40˚C higher. Please use a high temperature soldering iron. In case of the soldering iron with temperature control, please set it to 370 ± 10˚C.
- Pb free solder will tend to splash when heated too high (about 600˚C).

DANGER OF HIGH VOLTAGE AND HIGH TEMPERATURE (HOT/LIVE) OF THE INVERTER POWER SUPPLY (U)

INVERTER WARNING

This Inverter board looks like a regular PCB. However, this PCB drives the magnetron tube with extremely high voltage and high current. NEW H.V.

IT HAS:

1. **Very high voltage and high current circuits.**
   It functions the same as the high voltage transformer and high voltage capacitor in ordinary microwave ovens.
2. **Aluminum heat sink that is energized with very high voltage and high heat energy.**
3. **Very high voltage which may remain in circuitry even when oven is off. High voltage charge may remain in the capacitors on the board.**

DO NOT:

* 1. **Do not touch circuitry because it has very hot (high voltage) circuitry. Even when replacing board, extreme care should be taken to avoid possible electric shock hazards. High voltage charge may remain in circuits.**

* 2. **Do not touch aluminum heat sink because it is energized with very high voltage and is also very hot in high heat energy.**

* 3. **Do not try to adjust or tamper with preset control on the inverter board because it is very dangerous to adjust without proper test equipment.**

* 4. **Do not test oven while inverter grounding plate or screws are loose. It is very dangerous to operate H.V. Inverter Circuit (U) with loose mounting screws or if improperly grounded.**

5. **Do not try to repair inverter PCB because it is very dangerous to repair. Replace as a complete High Voltage inverter Circuit unit and return fully re-packed in original shipping box and shipping material.**

INVERTER POWER SUPPLY

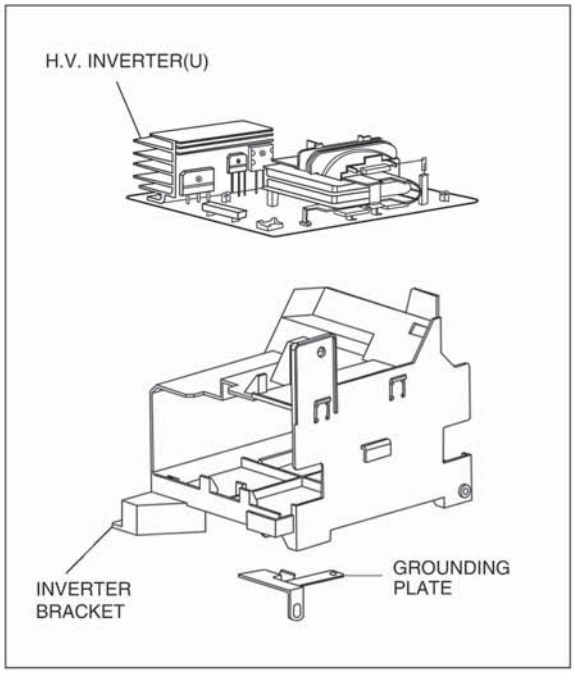

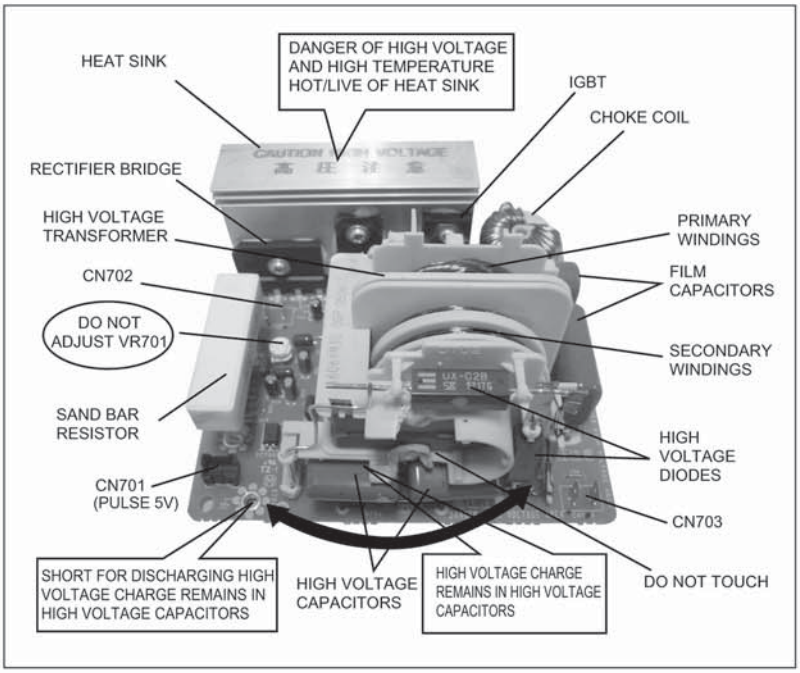

Specifications:

Models: / Specifications:	BOSCH HMB5050 HMB5060 HMB5020	SIEMENS HF35M630	Thermador MBES MBEB MBEW	GAGGENAU BM 281-610 BM 281-630
Power Source:	120V AC Single Phase, 60Hz			
Power Requirement:	1460W	1460W	1460W	1460W
Output:	1200W	1200W	1200W	1200W
Microwave Frequency:	2450MHz			
Timer:	30 min. / Stage (HIGH Power) ~ 5 Stage Maximum 99 min. 99 sec. / Stage (Other Power Levels) ~ 5 Stage Maximum			
Outside Dimensions:	$23\frac{7}{8}$"(606mm)(W) x $19\frac{9}{16}$"(493mm)(D) x 14"(356mm)(H)			
Oven Cavity Dimensions:	$18\frac{7}{16}$"(469mm)(W) x $18\frac{1}{2}$"(470mm)(D) x $10\frac{15}{16}$"(278mm)(H)			
Oven Cavity Size:	2.1 cu.ft.			
Weight:	36 lbs. / 16.4 kg			
PbF	This product uses PbF			
Specifications subject to change without notice.				

CONTENTS

1 FEATURE CHART 6
2 CONTROL PANEL 6
3 OPERATION AND DIGITAL PROGRAMMER CIRCUIT TEST PROCEDURE 7
4 SCHEMATIC DIAGRAM 9
5 DESCRIPTION OF OPERATING SEQUENCE 10
6 CAUTIONS TO BE OBSERVED WHEN TROUBLESHOOTING 12
7 DISASSEMBLY AND PARTS REPLACEMENT PROCEDURE 14
8 COMPONENT TEST PROCEDURE 18
9 MEASUREMENTS AND ADJUSTMENTS 20
10 PROCEDURE FOR MEASURING MICROWAVE ENERGY LEAKAGE 21
11 TROUBLESHOOTING GUIDE 23
12 EXPLODED VIEW AND PARTS LIST 26

1 FEATURE CHART

FEATURE	
Five Stage Cooking	○
Quick Defrost	○
Popcorn	○
Sensor Cook	○
Auto Reheat/Smart Sensor	○
Keep Warm	○
Timer	○
Digital Clock	○
Child Safety Look	○
Quick Min	○

2 CONTROL PANEL

BOSCH

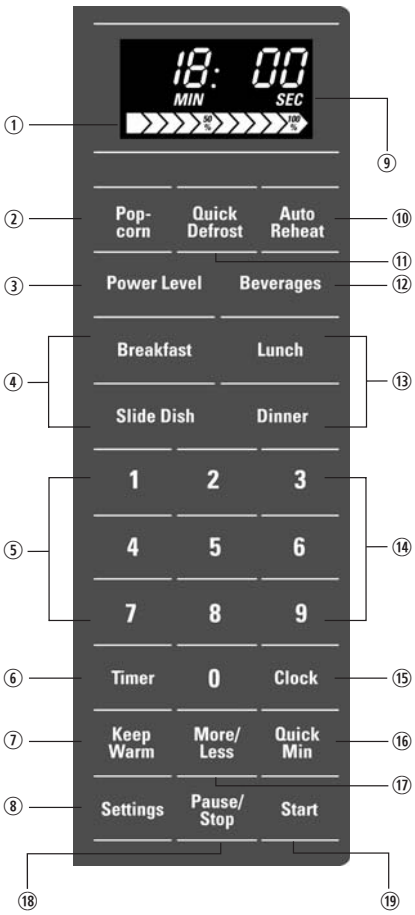

Thermador

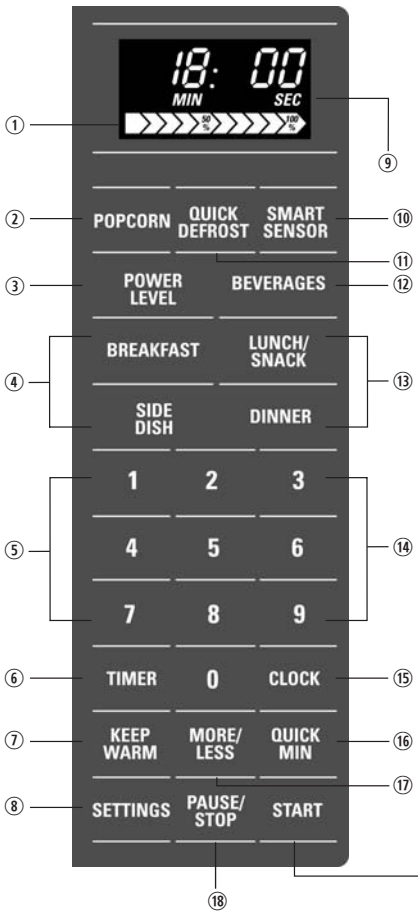

	BOSCH	Thermador
①	Power Level	POWER LEVEL
②	Popcorn Pad	POPCORN Pad
③	Power level Pad	POWER LEVEL Pad
④	Sensor Cook Pads	SENSOR COOK Pads
⑤	Number Pads	NUMBER Pads
⑥	Timer Pad	TIMER Pad
⑦	Keep Warm Pad	KEEP WARM Pad
⑧	Settings Pad	SETTINGS Pad
⑨	**Display Window**	**DISPLAY WINDOW**
	Step by step instructions scroll for easy operation	
⑩	Auto Reheat Pad	SMART SENSOR pad
⑪	Quick Defrost Pad	QUICK DEFROST Pad
⑫	Beverages Pad	BEVERAGES Pad
⑬	Sensor Cook Pad	SENSOR COOK Pad
⑭	Number Pads	NUMBER Pads
⑮	Clock Pad	CLOCK Pad
⑯	Quick Min Pad	QUICK MIN Pad
⑰	More/Less Pad	MORE/LESS Pad

Pause/Stop Pad
Before cooking: One tap clears your instructions.
During cooking: One tap temporarily stops the cooking process. Another tap cancels all your instructions and time of day or colon appears on the display window.

Start Pad
One tap allows oven to begin functioning. If door is opened or Start Pad is pressed once during oven operation, START Pad must again be pressed to restart oven.

PAUSE/STOP Pad
Before cooking: One tap clears your instructions.
During cooking: One tap temporarily stops the cooking process. Another tap cancels all your instructions and time of day or colon appears on the display window.

START Pad
One tap allows oven to begin functioning. If door is opened or STARTPad is pressed once during oven operation, START Pad must again be pressed to restart oven.

3 OPERATION AND DIGITAL PROGRAMMER CIRCUIT TEST PROCEDURE

3.1. To set clock

OPERATION	SCROLL DISPLAY
1. Plug the power supply cord into wall outlet.	**TO REFER TO OPERATING INSTRUCTIONS BEFORE USE.**
2. Press **Clock** pad.	☼ ☼
3. Enter time of day (TOD) by pressing appropriate **Number** pads.	11 ☼ ☼ 25
4. Press **Clock** pad. TOD has now been resistered into the digital programmer circuit and will count up by minutes.	11 : 25

3.2. Time cooking for two stage

OPERATION	SCROLL DISPLAY
1. Place a water load in the oven.	
2. Press **Power Level** pad once to set High power. (1st stage)	P 1 0
3. Set for 5 seconds by pressing **Number** pads. 5 Sec.= 5	5 SEC
4. Press **Power Level** pad 6 times to set Medium power. (2nd stage)	P 5
5. Set for 1 minute by pressing **Number** pads. 1 Min.= 1 0 0	1 00 MIN SEC
6. Press **Start** pad.	5 SEC
7. When 1st stage cooking time has elapsed. Oven beeps twice and automatically switches to 2nd stage cooking.	1 00 MIN SEC
8. When 2nd stage cooking time has elapsed, oven beeps 5 times and shuts off.	Time of day or colon if set appears in the display

3.3. Quick defrost

OPERATION	SCROLL DISPLAY
1. Press Quick Defrost Pad.	**INVERTER TURBO DEFROST**
2. Set the weight for 1 lb by pressing **Number** pads. 1 lb= 1 0	1.0 LB
3. Press **Start** pad.	4 45 MIN SEC
4. Press **Pause/Stop** Pad twice. Oven shuts off.	Time of day or colon if set appears in the display.

3.4. Popcorn

OPERATION	SCROLL DISPLAY
1. Press **Popcorn** pad once for 3.5 oz serving. (Select 3.5, 3.0, 1.75 oz)	3.5 OZ
2. Press **Start** pad.	3.5 OZ
3. About 5 to 8 seconds later, cooking time will show on display. (Note)	2 08 MIN SEC
When cooking time has elapsed, Oven beeps 5 times and shuts off.	Time of day or colon if set appears in the display.

Note: 5 to 8 seconds is the voltage detecting time, and the cooking time shown on display is determined by the detected voltage.

3.5. Keep warm

OPERATION	SCROLL DISPLAY
1. Press **Keep Warm** pad.	**KEEP WARM**
2. Set for 1 minute by pressing Number Pad. 1 Min.= 1 0 0	1 00 MIN SEC
3. Press **Start** pad.	1 00 MIN SEC
4. When cooking time has elapsed, Oven beeps 5 times and shuts off.	Time of day or colon if set appears in the display.

3.6. Auto cooking

OPERATION	SCROLL DISPLAY
1. Pour 150 ± 15cc (4.5 ± 1/2 ozs) of room temperature water in beaker in the center of the oven. Press **Sensor Reheat** pad twice.	
2. Press **Start** pad.	
3.The steam sensor detects steam about 1.5 to 4 minutes after the start pad is pressed. Sensor cooking (T1) automatically switches to cooking time(T2). "Sensor" disappears with beep sounds and the remainder of cooking time appears in the display window. **NOTE:** Cooking time will vary depending on the water temperature, the shape of the beaker or the Power source Voltage.	
4. When cooking time has elapsed, Oven beeps 5 times and shuts off.	Time of day or colon if set appears in the display.

3.7. To set/reset child safety lock

OPERATION	SCROLL DISPLAY
1. Press **Settings** pad.	**SELECT FUNCTION**
2. Press **Number** pad to select 5.	**CHILD LOCK ON/OFF ON PRESS 1, OFF PRESS 2**
3. Press 1 to select child lock on.	**CHILD LOCK ON**
4. If you want to reset, please press **Settings** pad.	**SELECT FUNCTION**
5. Press **Number** pad to select 5.	**CHILD LOCK ON/OFF ON PRESS 1, OFF PRESS 2**
6. Press 2 to select child lock off.	**CHILD LOCK OFF**

3.7. Power level

Press Power Level	Power Level	Display Window
once	P10 (HIGH)	P10
twice	P9	P9
3 times	P8	P8
4 times	P7 (MED.HIGH)	P7
5 times	P6 (MEDIUM)	P6
6 times	P5	P5
7 times	P4	P4
8 times	P3 (MEDIUM-LOW)	P3
9 times	P2	P2
10 times	P1 (LOW)	P1

4 SCHEMATIC DIAGRAM

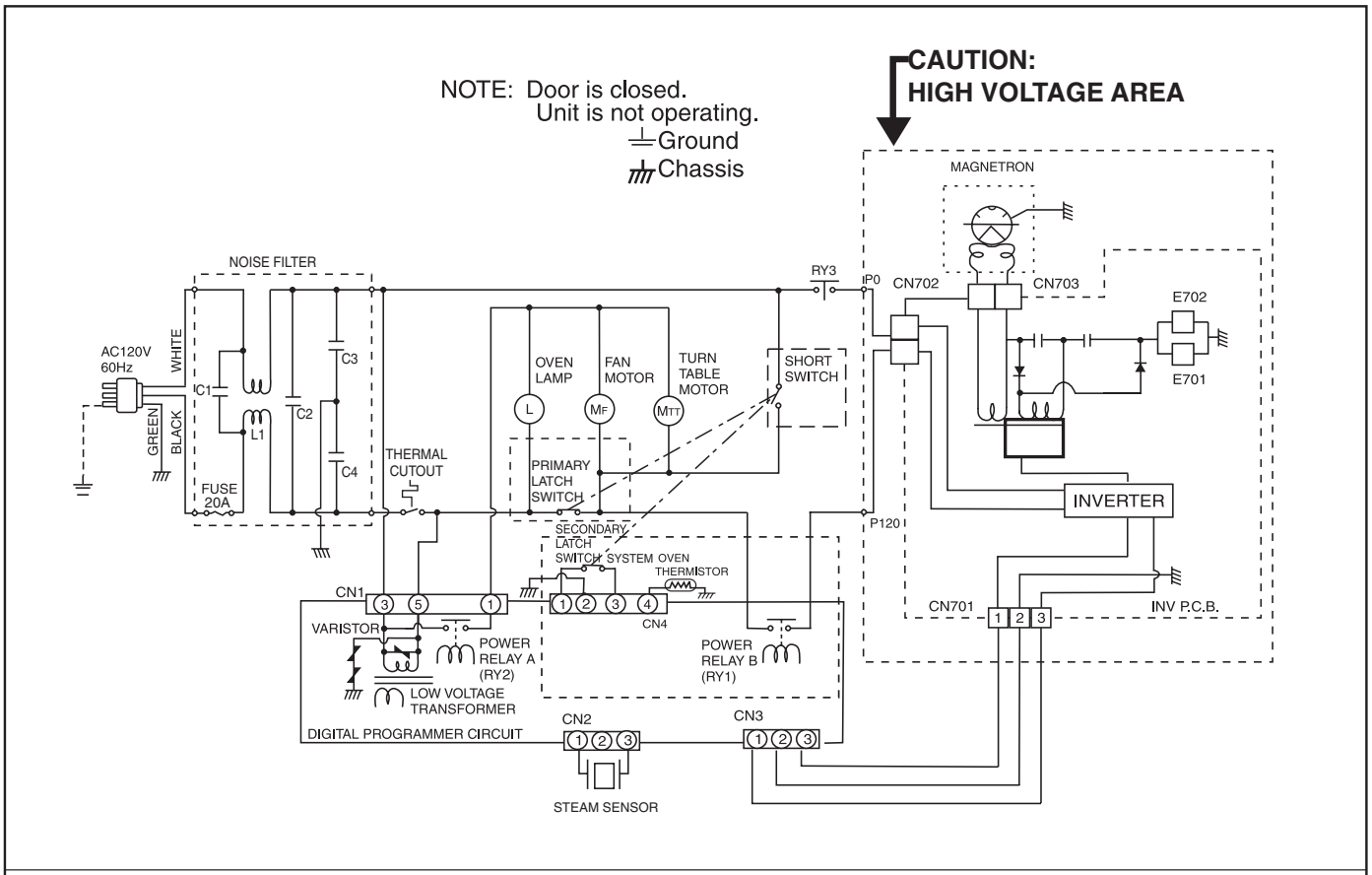

WIRING DIAGRAM

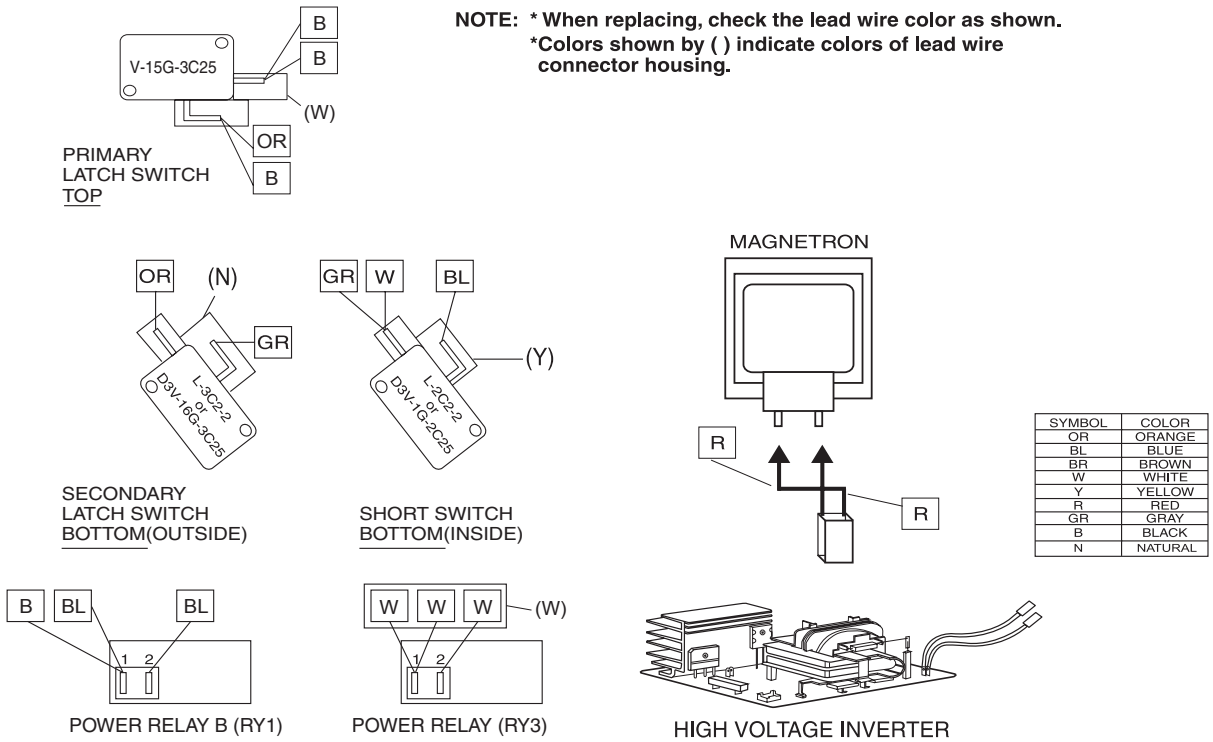

NOTE: * When replacing, check the lead wire color as shown.
***Colors shown by ( ) indicate colors of lead wire connector housing.**

SYMBOL	COLOR
OR	ORANGE
BL	BLUE
BR	BROWN
W	WHITE
Y	YELLOW
R	RED
GR	GRAY
B	BLACK
N	NATURAL

5 DESCRIPTION OF OPERATING SEQUENCE

5.1. Variable power cooking control

High Voltage Inverter Power Supply (U) controls output power by the signal from Digital Programmer Circuit (DPC). Power relay always stays ON, but PWM (pulse width modulation) signal controls microwave output power.

NOTE:

The ON/OFF time ratio does not correspond with the percentage of microwave power since approximately 2 seconds are required for heating of magnetron filament.

Variable Power Cooking

POWER SETTING		OUTPUT POWER(%) APPROX.	ON-OFF TIME OF POWER RELAY (RY1)	
			ON(SEC)	OFF(SEC)
HIGH	P10	100%	22	0
	P9	90%	22	0
	P8	80%	22	0
MEDIUM-HIGH	P7	70%	22	0
MEDIUM	P6	60%	22	0
	P5	50%	22	0
	P4	40%	22	0
MEDIUM-LOW	P3	30%	22	0
	P2	20%	15	7
	P1	10%	8	14
DEFROST	P3	30%	22	0

5.2. Inverter power supply circuit NEW H.V.

The Inverter Power Supply circuit powered from the line voltage, 120V 60Hz AC input supplies 4,000V DC to the magnetron tube, and functions in place of the H.V. transformer, the H.V.capacitor and H.V. diode.

1. The AC input voltage 120V 60Hz is rectified to DC voltage immediately.
2. DC voltage will be supplied to the switching devices called IGBT. These devices are switched ON-OFF by the 20 to 40 kHz PWM (pulse width modulation) signal from the microcomputer in the DPC.
3. This drives the High voltage transformer to increase voltage up to 2,000V AC.
4. Then the half-wave doubler voltage rectifier circuit, consisting of the H.V. diodes and capacitors, generates the necessary 4,000V DC needed for the magnetron.
5. Output power of the magnetron tube is always monitored by the signal output from the current transformer built into the inverter circuit.
6. This signal is fed back to the microcomputer in the DPC to determine operating conditions and output necessary to control PWM signal to the Inverter Power Supply for control of the output power.

5.3. Quick defrost

When the Auto Control feature is selected and the Start pad is tapped:

1. The digital programer circuit determines the power level and cooking time to complete cooking and indicates the operating state in the display window. Table shows the corresponding cooking times for respective serving by categories.

Quick Defrost

SELECTED WEIGHT	COOKING TIME
1.0 LB	4 min.45 sec.

2. When cooking time in the display window has elapsed, the oven turns off automatically by a control signal from the digital programmer circuit.

5.4. Sensor cooking

Auto sensor cooking without setting a power level or selecting a time. All that is necessary is to select an Auto Sensor Program before starting to cook.

Understanding Auto Sensor Cooking

As the food cooks, a certain amount of steam is produced. If the food is covered, this steam builds up and eventually escapes from the container. In Auto Sensor Cooking, a carefully designed instrument, called the steam sensor element, senses this escape of steam. Then, based upon the Auto Sensor Program selected, the unit will automatically determine the correct power level and the proper length of time it will take to cook the food.

NOTE:

Auto Sensor Cooking is successful with the foods and recipes found in the Auto Sensor Cooking Guide. Because of the vast differences in food composition, items not mentioned in the Cooking Guide should be prepared in the microwave oven using power select and time features. Please consult Variable Power Microwave Cookbook for procedures.

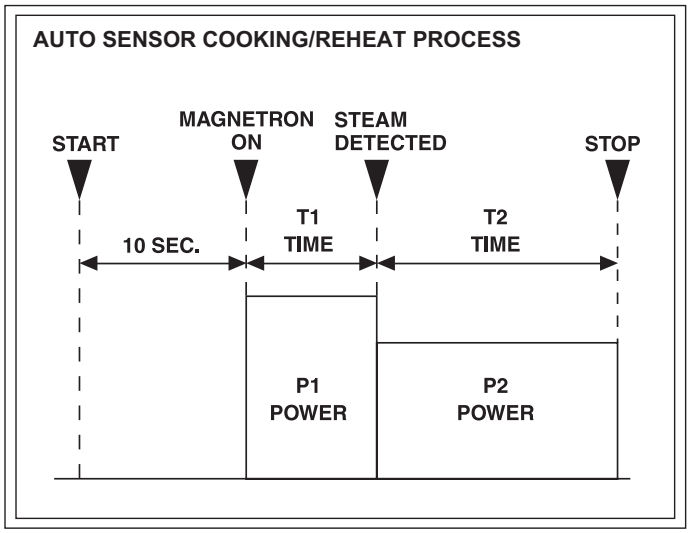

Explanation of the Auto Sensor Cooking process

1. During the first 10 second period there is no microwave activity. When calculating the T2 time by using the formula below make sure this 10 seconds is subtracted from the T1 time. In other words, T1 time starts at the end of the 10 second period.
2. **T1 time** The total amount of time it takes the microwave oven to switch to T2 time after the 10 second period.
3. **T2 time** When the steam escapes from the cooking container placed in the oven, the steam sensor detects it and the microprocessor calculates the balance of cooking time. This T2 time is then shown in the display and begins counting down.

Balance of cooking time (T2 time)

The balance of cooking time which is called T2 time, can be calculated by the following formula.

T2 time (in sec.) = T1 time X K factor

NOTE:

Remember, the T1 time starts after the 10 second period. The coefficient K is programmed into the microprocessor memory and they are listed in the following tables along with the P1 and P2 powers.

NOTE:

When "More" or "Less" pad is selected, the K factor varies resulting in T2 time to be increased or decreased.

Example of calculating the T2 time

Example 1: If the T1 time is measured to be 2 minutes and 40 seconds after the 10 second period, and the Auto program selected is Fresh Vegetable:

T2 = T1 X K
= 2 min. and 40 sec. X 0.5
= 160sec. X 0.5
= 80 sec.

Category	P1 Power	P2 Power	K Factor Standard
Fresh Vegetable	HIGH	HIGH	0.5

5.5. Auto reheat

Auto Sensor Reheat is a quick and easy way to reheat refrigerated and room temperature foods.
Simply press the reheat pad. There is no need to select power level and cooking time.

NOTE:

The Auto Sensor Reheat process is same as Auto Sensor Cooking process.

Category	P1 Power	P2 Power	K Factor Standard
Auto Reheat	HIGH	MEDIUM	0.2

5.6. Steam sensor and digital programmer circuit

In order to determine if the steam sensor function of the digital programmer circuit is working, do the following test.

1. Place a water load (150 cc) in the oven.
2. Tap Sensor Reheat pad.
3. Tap Start pad.
4. Steam Sensor detects steam about 1.5 to 4 minutes after the Start pad is tapped.
5. T1 time cooking automatically switches to remaining time for cooking (T2).
6. The remaining cooking time (T2) appears in display window. If the following cooking time appears, Steam Sensor function is normal.

T1 TIME	T2 TIME (Remaining cooking time)
1 Min. 30 Sec. ~ 4 Min.	18 Sec. ~ 48 Sec.

5.7. Thermistor

The thermistor which fixed on magnetron detects magnetron temperature and make power down when the temperature becomes abnormal high. A normal thermistor's resistance values for temperature ranges between 75-85 degree F is from 37kΩ to 57kΩ.

6 CAUTIONS TO BE OBSERVED WHEN TROUBLESHOOTING

Unlike many other appliances, the microwave oven is a high voltage, high current device. It is free from danger in ordinary use, though extreme care should be taken during repair.

Caution

Servicemen should remove their watches whenever working close to or replacing the magnetron.

6.1. Check the grounding

Do not operate on a two wire extension cord. The microwave oven is designed to be grounded when used. It is imperative, therefore, to ensure the appliance is properly grounded before beginning repair work.

6.2. Inverter warnings

DANGER, HIGH VOLTAGE AND HIGH TEMPERATURE (HOT/LIVE) OF THE INVERTER POWER SUPPLY (U)

The High Voltage Inverter Power Supply handles very high voltage and current for the magnetron tube. Though it is free from danger in ordinary use, extreme care should be taken during repair.

The aluminum heat sink is also energized with high voltage (HOT), do not touch when the AC input terminals are energized. The power device Collector is directly connected to the aluminum heat sink.

The aluminum heat sink may be HOT due to heat energy, therefore, extreme care should be taken during servicing.

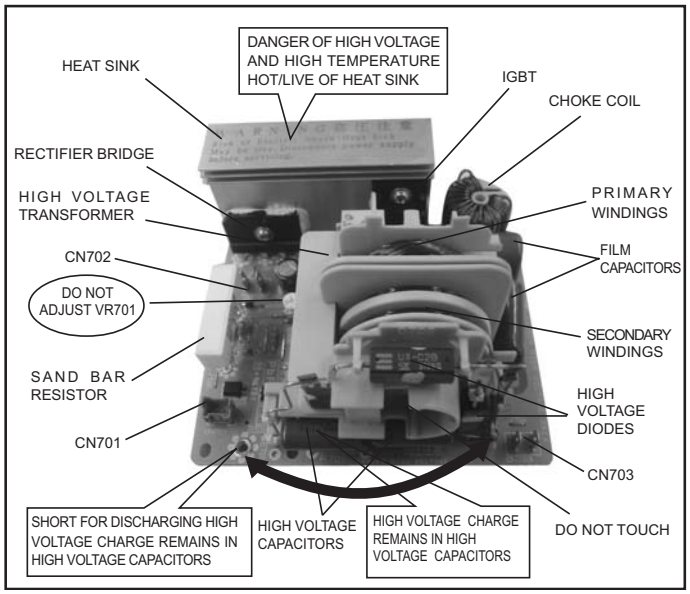

H.V. Inverter warning

WARNING FOR INVERTER POWER SUPPLY (U) GROUNDING

Check the High Voltage Inverter Power Supply circuit grounding. The high voltage inverter power supply circuit board must have a proper chassis ground. The inverter grounding bracket must be connected to the chassis. If the inverter board is not grounded it will expose the user to very high voltages and cause extreme DANGER! Be sure that the inverter circuit is properly grounded via the inverter grounding bracket.

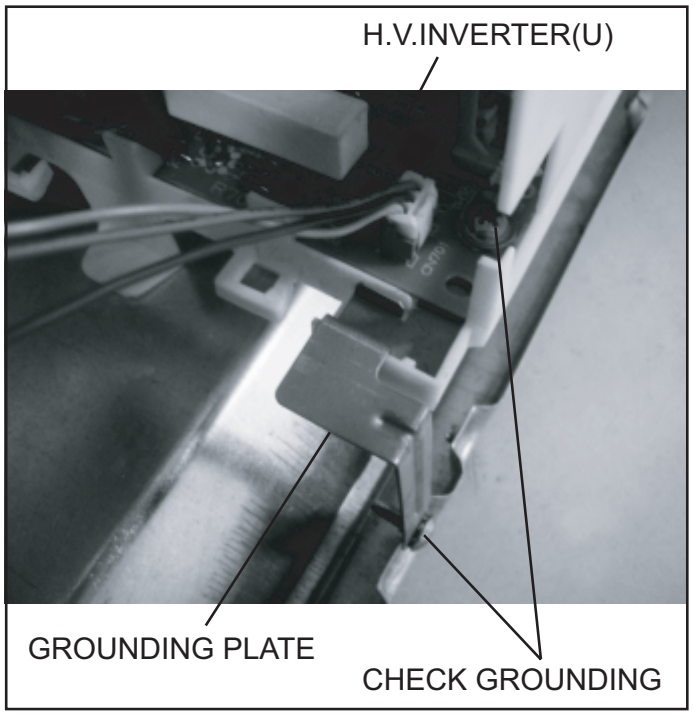

Grounding of the inverter circuit board

WARNING! DISCHARGE THE HIGH VOLATGE CAPACITORS

For about 30 seconds after the oven is turned off, an electric charge remains in the high voltage capacitors in the Inverter Power Supply circuit board.

When replacing or checking parts, remove the power plug from the outlet and short the inverter output terminal of the magnetron filament terminals to the chassis ground with an insulated handle screwdriver to discharge. **Please be sure to touch the chassis ground side first and then short to the output terminals.**

MAGNETRON FILAMENT TERMINAL

INSULATED HANDLE SCREWDRIVER

Touch chassis side first then short to the terminal of the magnetron filament terminal.

Discharging the high voltage capacitors

WARNING

There is high voltage present with high current capabilities in the circuits of the primary and secondary windings, choke coil and heat sink of the inverter. It is extremely dangerous to work on or near these circuits with the oven energized. DO NOT measure the voltage in the high voltage circuit including the filament voltage of the magnetron.

WARNING

Never touch any circuit wiring with your hand or with an insulated tool during operation.

6.3. Part replacement.

When any part or component is to be replaced, always ensure that the power cord is removed from the wall outlet.

6.4. When the 20A fuse is blown due to the operation of the short switch:

WARNING

When the 20A 120V fuse is blown due to the operation of the interlock monitor switch, replace all of the components (primary latch switch, door switch, short switch and power relay B (RY1)).

1. This is mandatory. Refer to “adjustments and measurements” for the location of these switches.
2. When replacing the fuse, confirm that it has the appropriate rating for these models.
3. When replacing faulty switches, be sure the mounting tabs are not bent, broken or deficient in their ability to hold the switches.

6.5. Avoid inserting nails, wire etc. through any holes in the unit during operation.

Never insert a wire, nail or any other metal object through the lamp holes on the cavity or any holes or gaps, because such objects may work as an antenna and cause microwave leakage.

6.6. Confirm after repair

1. After repair or replacement of parts, make sure that the screws of the oven, etc. are neither loose nor missing. Microwave might leak if screws are not properly tightened.
2. Make sure that all electrical connections are tight before inserting the plug into the wall outlet.
3. Check for microwave energy leakage. (Refer to procedure for measuring microwave energy leakage).

CAUTION MICROWAVE RADIATION

USE CAUTION NOT TO BECOME EXPOSED TO RADIATION FROM THE MICROWAVE MAGNETRON OR OTHER PARTS CONDUCTING MICROWAVE ENERGY

IMPORTANT NOTICE

The following components have potentials above 2000V while the appliance is operated.

- Magnetron
- High voltage transformer (Located on inverter (U))
- High voltage diodes (Located on inverter (U))
- High voltage capacitors (Located on inverter (U))

Pay special attention to these areas.

When the appliance is operated with the door hinges or magnetron installed incorrectly, the microwave leakage can exceed more than 5mW/cm2. After repair or exchange, it is very important to check if the magnetron and the door hinges are correctly installed.

6.7. Sharp edges

Caution

Please use caution when unpacking, installing or moving the unit, as some exposed edges may be sharp to the touch and cause injury if not handled with care.

7 DISASSEMBLY AND PARTS REPLACEMENT PROCEDURE

7.1. Magnetron

1. Discharge high voltage charge.
2. Remove 2 screws holding air guide A on the oven cavity.
3. Remove 1 screw holding air guide B.
4. Remove 1 screw holding themistor.
5. Disconnect 2 high voltage lead wires from magnetron filament terminals.
6. Remove 4 screws holding the magnetron.

NOTE:

After replacement of the magnetron, tighten mounting screws properly in an x pattern, making sure there is no gap between the waveguide and the magnetron to prevent microwave leakage.

CAUTION

When replacing the magnetron, be sure the antenna gasket is in place.

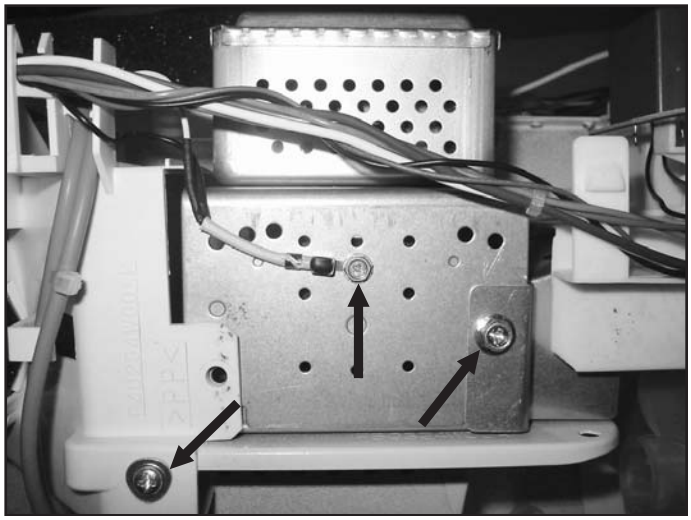

7.2. Digital programmer circuit (D.P.C)

NOTE:

Before handing the D.P.C ensure that your body is connected to ground to discharge any electric charge.

1. Disconnect all connectors from D.P.C.
2. Remove 1 grounding screw.
3. Remove 1 screw holding escutcheon base and slide the escutcheon base upward slightly.
4. Remove 1 screw holding D.P.C.
5. Release lock of connector CN6 by pushing both levers to inside pull upward, and remove flat cable of membrane keyboard.
6. Separate D.P.C board from tabs on the escutcheon base and remove D.P.C board.

NOTE:

1. **The membrane key board is attached to the escutcheon base with double faced adhesive tape.**

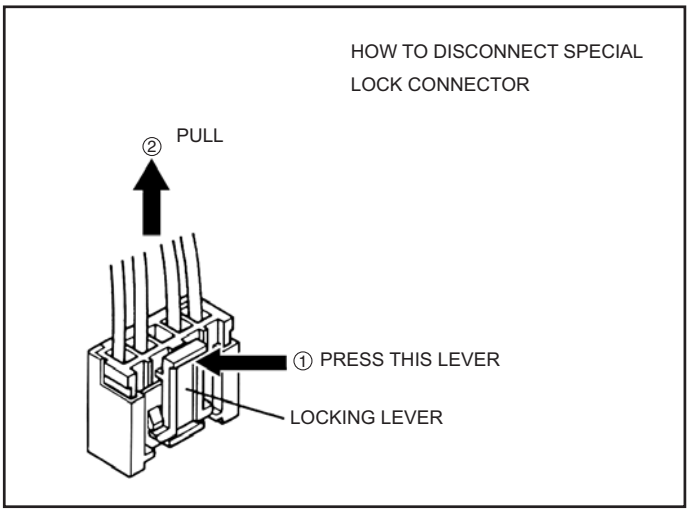

7.3. Low voltage transformer and/or power relays (RY1, RY2, RY3)

NOTE:

Be sure to ground any static electric charge built up on your body before handling the D.P.C.

1. Replace D.P.C. board.

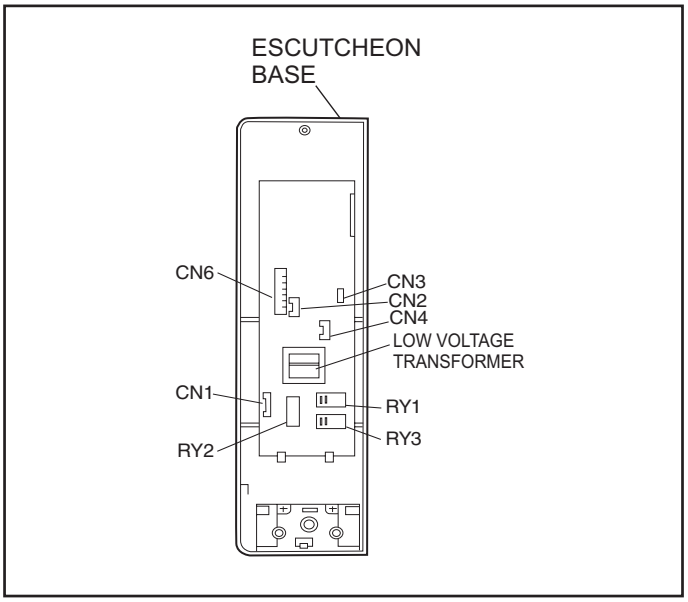

7.4. Fan motor

1. Disconnect 2 lead wires from fan motor terminals.
2. Remove 2 screws at location on oven attaching orifice assembly.
3. Remove orifice assembly from oven assembly.
4. Remove fan blade from the fan motor shaft by pulling it straight out.
5. Remove 2 screws holding fan motor to orifice.
6. Separate the fan motor from the orifice assembly by freeing 2 catch hooks on the orifice assembly.

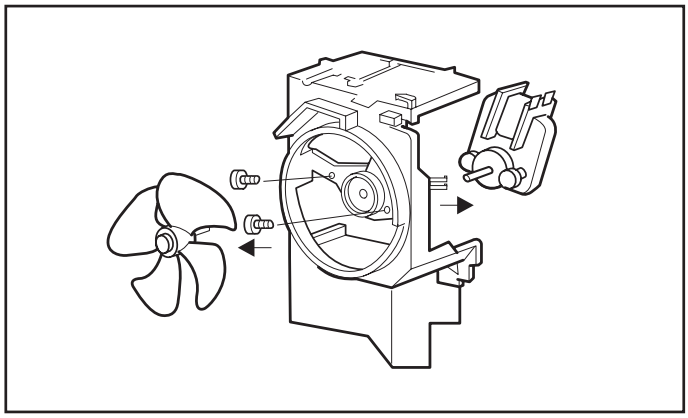

7.5. Door assembly

1. Remove door C from door E by carefully pulling outward, starting from upper right hand corner using a flat blade screwdriver.
2. Separate door E from tabs on door A and remove door A.
3. Open Door E at the opening angle of approximately 10°**(Note: The door cannot be removed if the opening angle is greater than 10°)**.
4. Remove the door E from its hinges by pushing the door E upward and out.
5. Remove door screen B from door A.
6. Remove door key and door key spring.

To re-install components:

1. Place the door's lower hinge pin into the bottom hinge hole.
2. Use your left index finger to support the door's lower hinge pin while guiding the door's upper hinge pin into the top hinge hole.
3. Lower your finger to seat the door onto the hinges.
4. Replace other components.

NOTE:

Door alignment is crucial. If door is misaligned, apply pressure until alignment is achieved.

NOTE:

After replacement of the defective component parts of the door, reassemble, and perform microwave leakage test.

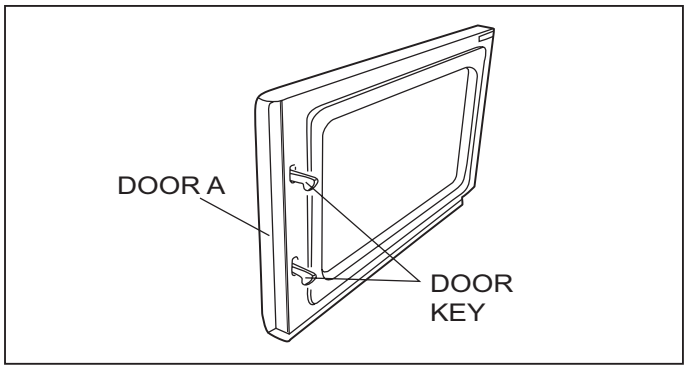

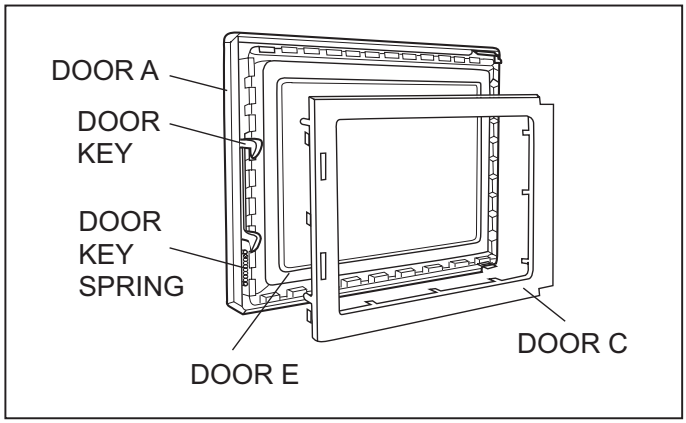

7.6. Turntable motor

1. Remove the motor cover by cutting, at the locations indicated by the arrows, with a cutter.
   NOTE:
   After removing the motor cover, be sure that cut portions are properly trimmed or bent to the inside so that no sharp edges will be exposed to outside.
2. Disconnect 2 lead wires connected to the turntable motor.
3. Remove the turntable motor by removing screw.
   NOTE:
   After replacing the new turntable motor and reconnecting the two lead wires, reinstall the motor cover by rotating it 180°, tucking the tabs into the base in the 2 provided slots, then screw the single tab to the base using a 4mm X 6mm screw.

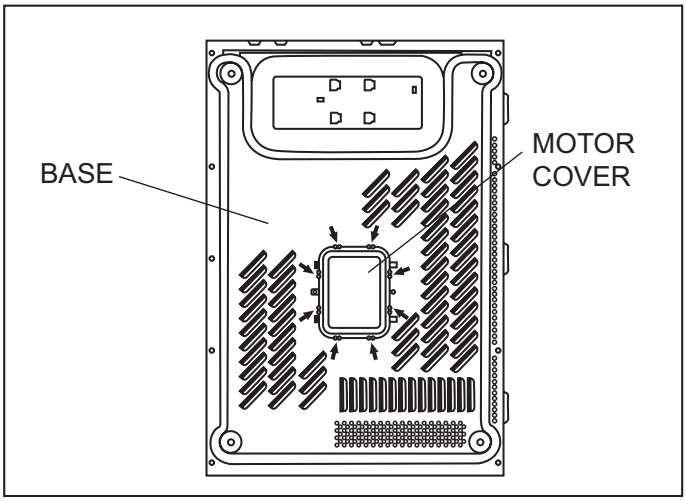

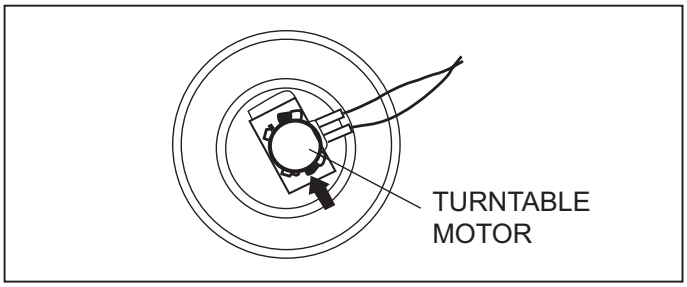

7.7. Steam sensor

1. Disconnect connector CN2 from digital programmer circuit board.
2. Disengage catch hooks on sensor cover C from orifice.
3. Remove steam sensor from orifice.

   NOTE:
   When installing the steam sensor, make sure that the direction of steam sensor is as shown in figure.

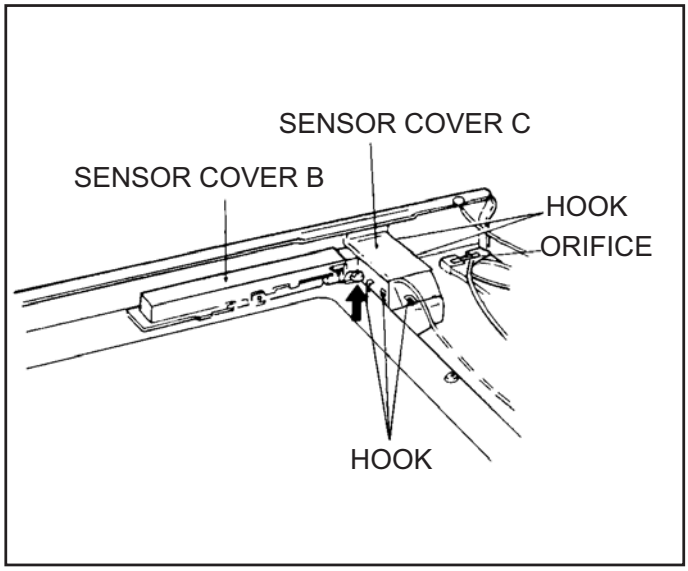

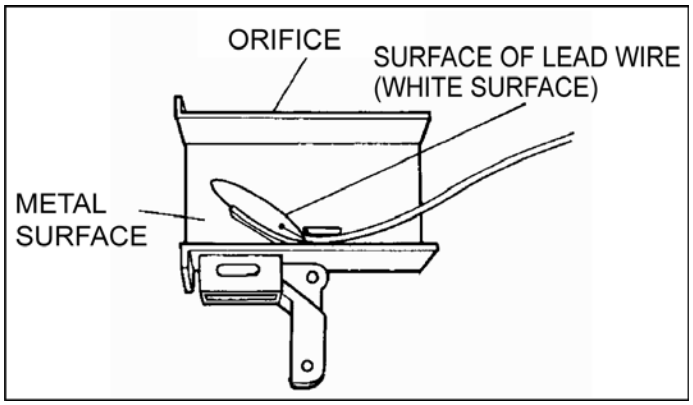

7.8. Inverter power supply

CAUTIONS

1. Always leave the grounding plate in place.
2. Always securely tighten the ground screw through the bottom of the chassis (base).
3. Securely connect 3 lead wire connectors.
4. Make sure the heat sink has enough space (gap) from the oven. Take special care not to dress any lead wire over the aluminum heat sink because it is hot.

1. Remove cabinet outer panel and discharge high voltage charge.
2. Remove the the H.V.lead wire from magnetron terminals.
3. Disconnect 2 connectors from CN701 & CN702 on H.V.Inverter(U).
4. Remove 1 screw holding grounding plate to the base.

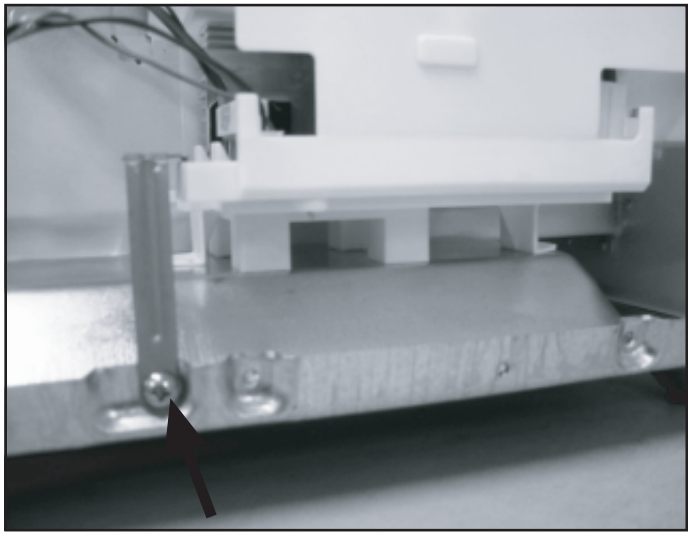

5. Bend back 2 locking metal tabs on the base.

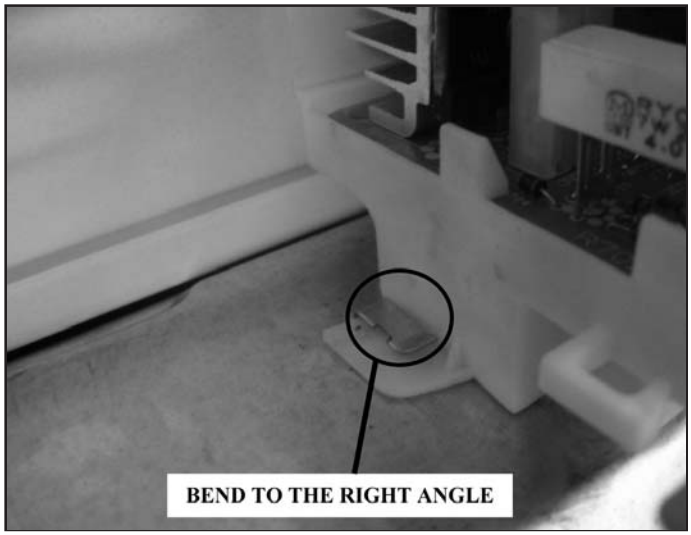

6. Press 1 encircled locking tab and then slide 4 locking tabs of Inverter bracket at the bottom of the base in direction of arrows.

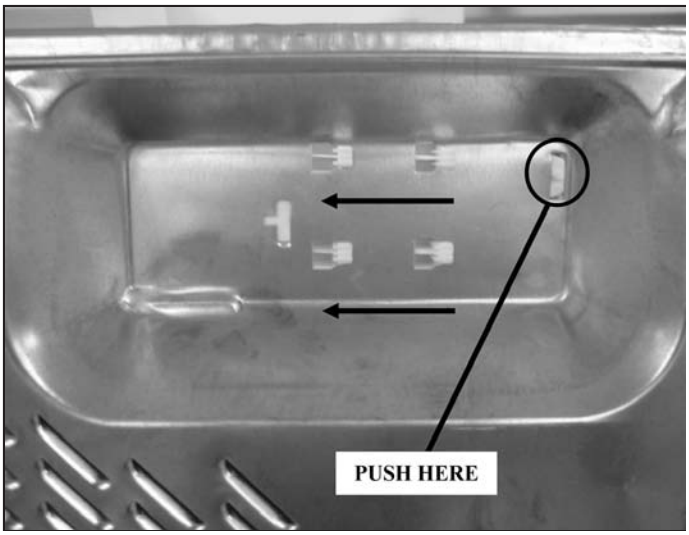

7. Remove 1 screw holding H.V.Inverter to Inverter bracket.

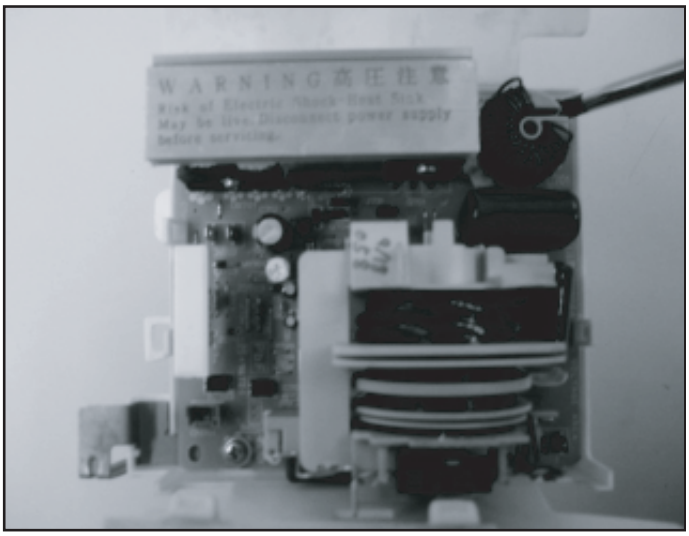

8. Remove 1 screw holding grounding plate to H.V. Inverter.

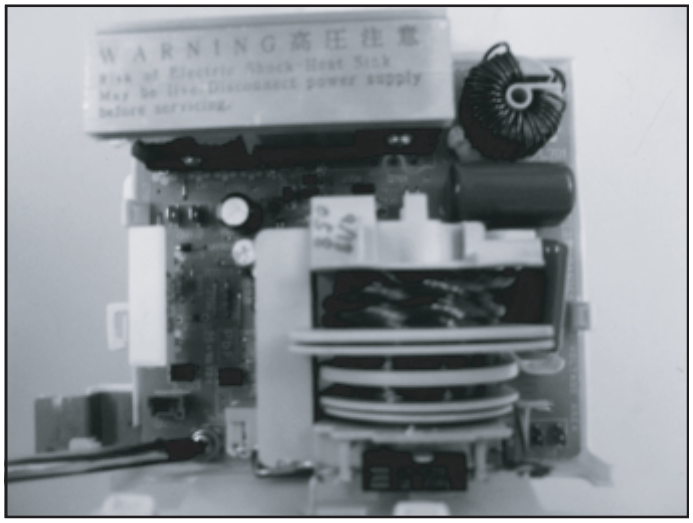

8 COMPONENT TEST PROCEDURE

CAUTIONS NEW. H.V.

1. High voltage is present at the high voltage terminal of the High Voltage Inverter (U) including aluminum heat sink during any cook cycle.
2. It is neither necessary nor advisable to attempt measurement of the high voltage.
3. Before touching any oven components, or wiring, always unplug the oven from its power source and discharge the high voltage capacitors.

8.1. Primary latch switch (door switch and power relay B) interlocks.

1. Unplug lead connectors to Power Relay B and verify open circuit of the power relay B 1-2 terminals.
2. Unplug lead connectors to Primary Latch Switch and Door Switch.
3. Test the continuity of switches at door opened and closed positions with ohm meter (low scale).
   Normal continuity readings should be as follows.

	Door Closed	Door Opened
Primary Latch switch	0Ω (Close)	∞ Ω (Open)
Door Switch	0Ω (Close)	∞ Ω (Open)
Power Relay B	∞ Ω (Open)	∞ Ω (Open)

8.2. Short switch & monitor

1. Unplug lead wires from Inverter Power Supply (U) primary terminals.
2. Connect test probes of ohm meter to the disconnected leads which were connected to Inverter Power Supply (U).
3. Test the continuity of short switch with door opened and closed positions using lowest scale of the ohm meter.
   Normal continuity readings should be as follows.

Door Opened	Door Closed
0Ω	∞ Ω

8.3. Magnetron

Continuity checks can only indicate an open filament or a shorted magnetron. To diagnose for an open filament or shorted magnetron.

1. Isolate magnetron from the circuit by disconnecting the leads.
2. A continuity check across magnetron filament terminals should indicate one ohm or less.
3. A continuity check between each filament terminal and magnetron case should read open.

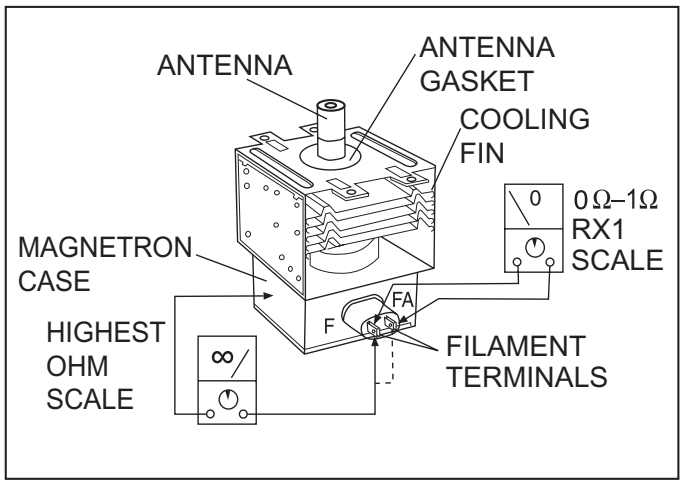

8.4. Membrane key board (Membrane switch assembly)

Check continuity between switch terminals, by tapping an appropriate pad on the key board. The contacts assignment of the respective pads on the key board is as shown in digital programmer circuit.

8.5. Inverter power supply (U)

DO NOT try to repair H.V. Inverter Power Supply (U). Replace complete H.V. Inverter(U) Unit.

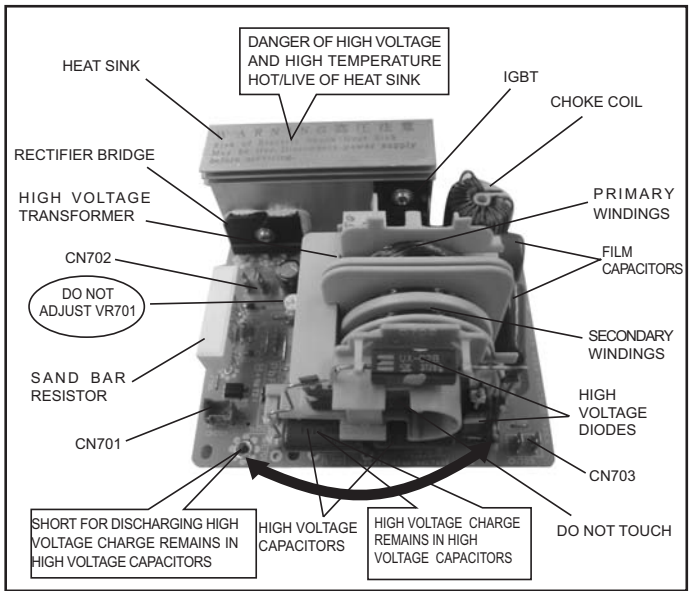

DANGER HIGH VOLTAGE

Test if failure codes of H97 or H98 appear by doing the following procedure. It is recommended to use an AC line input current Ampere meter for testing.

Test1

1. Program DPC.
   a. Tap Clock keypad
   b. Tap Timer keypad
   c. Tap Start keypad
   d. Tap Power Level keypad
2. Place 1 liter of water load into oven cavity.
3. Unplug 2 pin H.V. lead wire connector CN703 from magnetron tube.
4. Program oven at High power for 1 minute and press start.
   a. After approximately 23 seconds, oven stops.
   b. During oven operation, input current is approximately 0.5 to 1A. If both a and b are OK, proceed to test 2.

	INPUT AMPERE	FAILURE CODE
Unplug CN703	0.5 to 1A	Oven stops in 23 seconds after started.

Test2

Continued from Test 1

1. Unplug 3 pin connector CN701. CN703 remains unplugged.
2. Program oven at High power for 1 minute and press start.
   a. After approximately 3 seconds, oven stops.
   b. During oven operation, input current is approximately 0.4A.

	INPUT AMPERE	FAILURE CODE
Unplug CN701	<0.4A	Oven stops in 3 seconds after started.

If both a and b check OK, the Inverter Power Supply (U) can be determined to be OK.

9 MEASUREMENTS AND ADJUSTMENTS

WARNING

* For continued protection against radiation hazard, replace only with identical replacement parts (For touch models Part No. J61415G10XN, Type No. V-15G-3C25 for Primary latch switch; Part No. J61414T00AP, Type No. D3V-16G-3C25 for Secondary latch switch and Part No. F61785U30XN, Type No. D3V-1G-2C25 for short switch.)
* When the 20 Amp. fuse is blown due to the operation of the short switch, you must replace both power relay B & power relay (RY3) (Part No.AEBGJQC25F18, Type No. G5G-1A18VDC), Primary latch switch and the short switch. Then follow the installation procedures below.
* Interlock switch replacement In replacing faulty switches, be sure mounting tabs are not bent, broken or otherwise deficient in their ability to hold the switches.
* Refer to schematic diagram to ensure proper connection.

9.1. Adjustment of primary latch switch, door switch and short switch.

1. Mount the Primary latch switch, the door switch and the short switch to the door hook assembly as shown in ILL.
   NOTE:
   No specific individual adjustments during installation of the Primary latch switch, door switch or short switch to the door hook are required.
2. When mounting the door hook assembly to the oven assembly, adjust the door hook assembly by moving it in the direction of the arrows in the illustration, so that the oven door will not have any play in it. Check for play in the door by pulling the door assembly. Make sure that the latch keys move smoothly after adjustment is completed. Completely tighten the screws holding the door hook assembly to the oven assembly.
3. Reconnect the short switch and check the continuity of the monitor circuit and all latch switches again by following the component test procedures on P.18.
4. Measure microwave energy leakage after servicing.

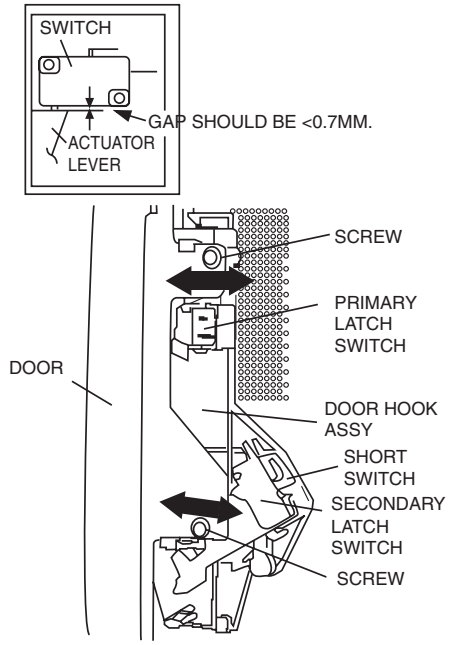

9.2. Measurement of microwave output

The output power of the magnetron can be determined by performing IEC standard test procedures. However, due to the complexity of IEC test procedures, it is recommended to test the magnetron using the simple method outlined below.

Necessary Equipment:

* 1 liter beaker *Glass thermometer
* Wrist watch or stopwatch

NOTE:

Check the line voltage under load. Low voltage will lower the magnetron output. Take the temperature readings and heating time as accurately as possible.

1. Fill the beaker with exactly one liter of tap water. Stir the water using the thermometer and record the water's temperature. (recorded as T1).
2. Place the beaker on the center of glass tray. Set the oven for High power and heat it for exactly two minutes.
3. Stir the water again and read the temperature of the water. (recorded as T2).
4. The normal temperature rise at High power level is as shown in table.

TABLE (1L-2min.test)

RATED OUTPUT	TEMPERATURE RISE
1200W	Min. 37°F

10 PROCEDURE FOR MEASURING MICROWAVE ENERGY LEAKAGE

WARNING

Check for radiation leakage after every servicing. After repairing or replacing any radiation safety device, keep a written record for future reference, as required by D.H.H.S. and Health regulation. This requirement must be strictly observed. In addition, the leakage reading must be recorded on the service repair ticket while in the customer's home.

NOTE:

The U.S. Government standard is 5 mW/cm^2 while in the customer's home. 2mW/cm^2 stated here is our own voluntary standard.

10.1. Equipment

- Microwave leak detector
- Glass thermometer 212°F or 100°C
- 600cc glass beaker

10.2. Procedure for measuring radiation leakage

Note before measuring.

- Do not exceed meter full scale deflection. Leakage monitor should initially be set to the highest scale.
- To prevent false readings the test probe should be held by the grip portion of the handle only and moved along the shaded area in Figure no faster than 1 inch/sec (2.5cm/sec).
- Leakage with the outer panel removed ..... less than 5mW/cm^2.
- Leakage for a fully assembled oven with door normally closed ..... less than 2mW/cm^2.
- Leakage for a fully assembled oven [Before the latch switch (primary) is interrupted] while pulling the door ..... less than 2mW/cm^2.

1. Pour 275 ± 15cc (9ozss ± 1/2oz) of 20°C ± 5°C (68° ± 9°F) water in a beaker which is graduated to 600cc, and place in the center of the oven.
2. Set the radiation monitor to 2450MHz and use it following the manufacturer's recommended test procedure to assure correct results.
3. When measuring the leakage, always use the 2 inch (5cm) spacer supplied with the probe.
4. Tap the start pad or set the timer and with the magnetron oscillating, measure the leakage by holding the probe perpendicular to the surface being measured.

10.2.1. Measurement with the outer panel removed.

Whenever you replace the magnetron, measure for radiation leakage before the outer panel is installed and after all necessary components are replaced or adjusted. Special care should be taken in measuring around the magnetron.

WARNING

Avoid contacting any high voltage parts.

10.2.2. Measurements with a fully assembled oven.

After all components, including outer panel are fully assembled, measure for radiation leakage around the door periphery, the door viewing window, the exhaust opening, control panel and air inlet openings.

10.3. Record keeping and notification after measurement

- After any adjustment or repair to a microwave oven, a leakage reading must be taken. Record this leakage reading on the repair ticket even if it is zero.

  A copy of this repair ticket and the microwave leakage reading should be kept by repair facility.

10.2. At least once a year, have the radiation monitor checked for calibration by its manufacturer.

WARNING
AVOID CONTACTING ANY HIGH VOLTAGE PARTS.

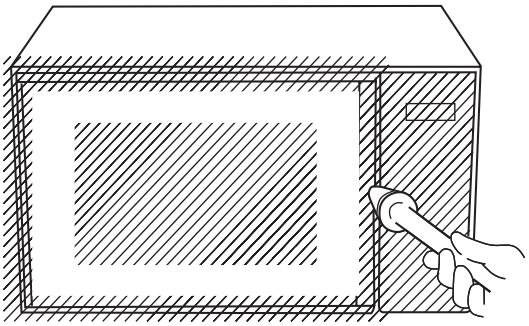

01-035

MOVE PROBE ALONG SHADED
AREA(////////)AROUND EXHAUST
OPENINGS AND AROUND
AIR INLET OPENING

11 TROUBLESHOOTING GUIDE

DANGER HIGH VOLTAGES ⚠

1. DO NOT RE-ADJUST PRESET CONTROL on the H.V.Inverter (U). It is very dangerous to repair or adjust without proper test equipment because this circuit handles very large current and high voltage. Operating a misaligned inverter circuit is dangerous.
2. Ensure proper grounding before checking for trouble.
3. Be careful of the high voltage circuitry, taking necessary precautions when troubleshooting.
4. Discharge high voltage remaining in the H.V.Inverter (U).
5. When checking the continuity of the switches or the H.V.Inverter, disconnect one lead wire from these parts and then check continuity with the AC plug removed. To do otherwise may result in a false reading or damage to your meter. When disconnecting a plastic connector from a terminal, you must hold the plastic connector instead of the lead wire and then disconnect it, otherwise lead wire may be damaged or the connector cannot be removed.
6. Do not touch any parts of the circuitry on the digital programmer circuit, since static electric discharge may damage this control panel. Always touch yourself to ground while working on this panel to discharge any static charge in your body.
7. 120V AC is present on the digital programmer circuit (Terminals of power relay's and primary circuit of Digital Programmer Circuit). When troubleshooting, be cautious of possible electrical shock hazard.

Before troubleshooting, operate the microwave oven following the correct operating procedures in the instruction manual in order to find the exact cause of any trouble, since operator error may be mistaken for the oven's malfunction.

11.1. (Trouble) Oven stops operation during cooking

	SYMPTOM	CAUSE	CORRECTIONS
1.	**Oven stops in 3 seconds** after pressing start pad	No 120V AC is supplied to H.V.Inverter (U) CN702 terminals	1. Latch Switch 2. Power relay RY-1 3. Loose lead wire connector CN701, CN702
	Oven stops in 23 seconds after pressing start pad	H.V.Inverter (U) operates by the control signals from DPC but magnetron is not oscillating	1. Magnetron 2. Loose lead wire connector CN703
	Oven stops in 10 seconds after pressing start pad (Auto sensor cook)	Steam sensor circuit does not function	1. Steam sensor 2. DPC 3. Loose wiring connector CN2
2.	**Oven stops** after pressing start pad	Most probably loose connection of connectors, or door latch mechanism is not adjusted properly	1. Allign door, Door Latch Switches 2. Loose wiring connectors

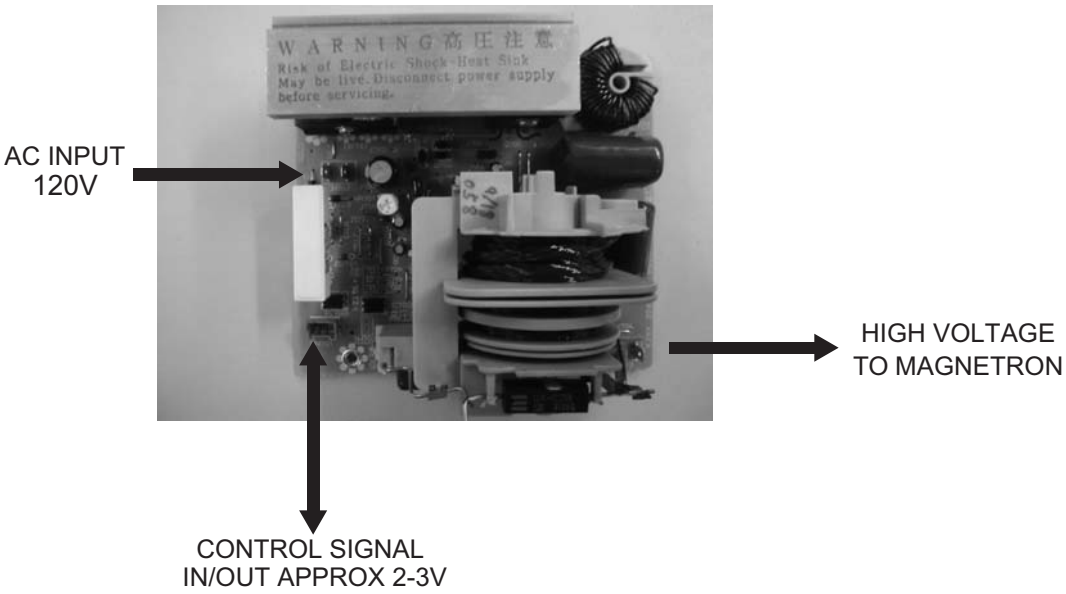

	SYMPTOM	CAUSE	CORRECTIONS
1.	Oven is dead. Fuse is OK. No display and no operation at all.	1. Open or loose lead wire harness 2. Open thermal cutout 3. Open low voltage transformer 4. Defective DPC	Check fan motor if thermal cutout is defective.
2.	No display and no operation at all. Fuse is blown.	1. Shorted lead wire harness 2. Defective primary latch switch (NOTE 1) 3. Defective short switch (NOTE 1) 4. Defective Inverter Power Supply (U)	Check adjustment of primary, secondary latch switch and short switch including door.
		NOTE 1: All of these switches must be replaced at the same time. Check continuity of power relay B (RY-1) and RY3's contacts (between 1 and 2) and if it has continuity, replace power relay B (RY-1) and/or RY3 also.	
3.	Oven does not accept key input(Program)	1. Key input is not in proper sequence 2. Open or loose connection of membrane key pad to DPC (Flat cable) 3. Shorted or open membrane key board 4. Defective DPC	Refer to operation procedure. Refer to DPC troubleshooting.
4.	Fan motor turns on when oven is plugged in with door closed.	1. Misadjustment or loose wiring of secondary latch switch 2. Defective secondary latch switch	Adjust door and latch switches.
5.	Timer starts count down but no microwave oscillation. (No heat while oven lamp and fan motor turn on)	1. Off-alignment of latch switches 2. Open or loose connection of high voltage circuit especially magnetron filament circuit NOTE: Large contact resistance will cause lower magnetron filament voltage and cause magnetron to have lower output and/or be intermittent. 3. Defective high voltage component H.V. Inverter Power Supply (U) Magnetron 4. Open or loose wiring of power relay B (RY-1) 5. Defective primary latch switch 6. Defective DPC or power relay B (RY-1)	Adjust door and latch switches. Check high voltage component according to component test procedure and replace if it is defective. Refer to DPC troubleshooting
6.	Oven can program but timer does not start countdown.	1. Open or loose wiring of secondary latch switch 2. Off-alignment of secondary latch switch 3. Defective secondary latch switch	
7.	Microwave output is low. Oven takes longer time to cook food.	1. Decrease in power source voltage 2. Open or loose wiring of magnetron filament circuit.(Intermittent oscillation) 3. Aging change of magnetron	Consult electrician
8.	Fan motor turns on and turntable rotates when door is opened.	1. Shorted primary latch switch	
9.	Oven does not operate and return to plugged in mode as soon as start pad is pressed.	1. Defective DPC	Check tighten screws on escutcheon base bracket, D.P.C. board.
10.	Loud buzzing noise can be heard.	1. Loose fan and fan motor	
11.	Turntable motor does not rotate.	1. Open or loose wiring of turntable motor 2. Defective turntable motor	
12.	Oven stops operation during cooking.	1. Open or loose wiring of primary and secondary latch switch 2. Operation of thermal cutout	Adjust door and latch switches.
13.	Oven returns to plugged in mode after 10 seconds elapses on the Auto sensor cooking mode.	1. Open or loose wiring of sensor terminal from DPC 2. Open steam sensor 3. Defective DPC	

11.2. Troubleshooting of inverter circuit (U) and magnetron NEW H.V.

This oven is programmed with a self diagnostic failure code system which will help for troubleshooting. H97, H98, and H99 are the provided failure codes to indicate magnetron and inverter circuit problem areas. This section explains failure codes of H97, H98, and H99. First, you must program the DPC by pressing Clock , Timer , Start , Power Level . Program unit for operation. H97, H98, H99 appears in display window a short time after start key is pressed and there is no microwave oscillation.

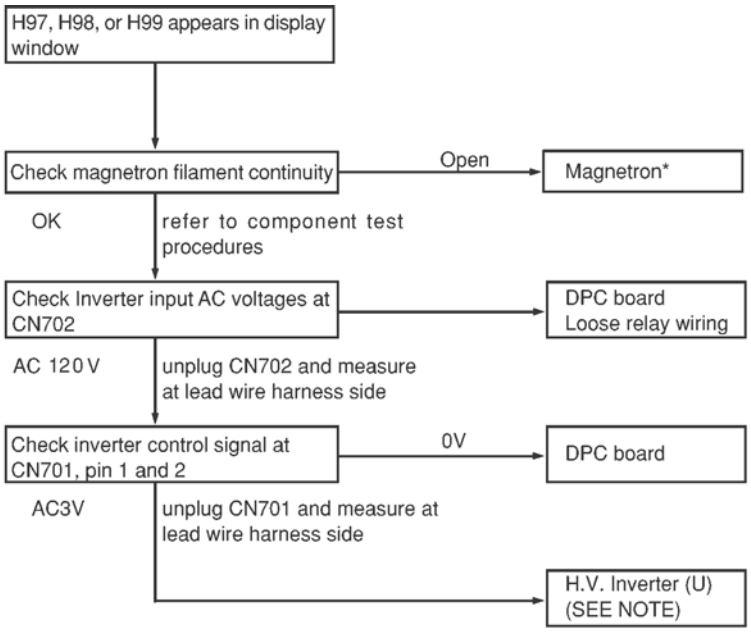

NOTE: After check, unplug unit to reset to normal operation mode.

NOTE: DO NOT try to repair this Inverter Power Supply (U) and also DO NOT RE-ADJUST PRESET CONTROL on the board. It is very dangerous to repair or adjust without proper test equipment because this circuit handles very high voltage and very large current. Off alignment of inverter board operation is dangerous. Operating a misaligned Inverter circuit is dangerous due to the very high voltage and current that is produced by this board. Defective boards must be replaced with a new one.

* Check magnetron filament for open or short to case before proceeding to determine a good magnetron.

Alternate way to troubleshoot oven with AC Ampere meter used

H97, H98, H99 appears in display window a short time after start key is pressed and no microwave oscillation with AC Ampere meter used for troubleshooting

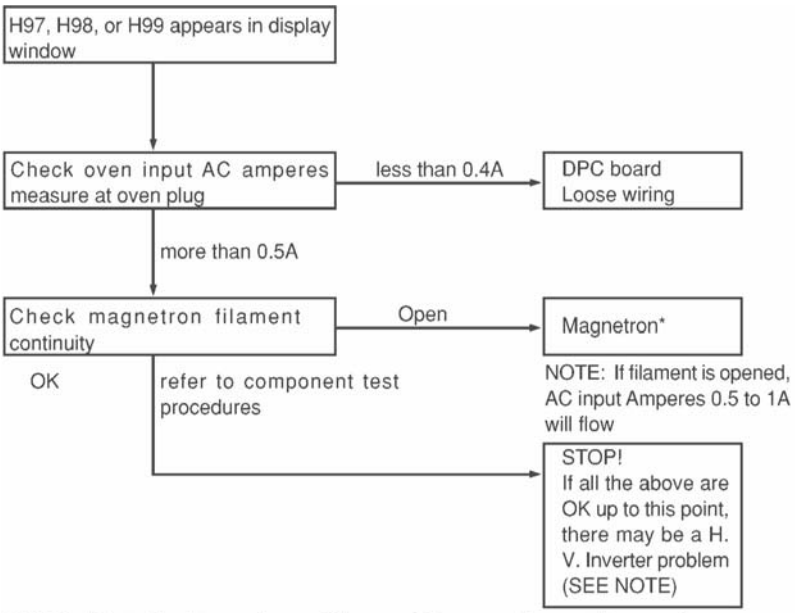

NOTE: After check, unplug unit to reset to normal operation mode.

NOTE: DO NOT try to repair this Inverter Power Supply (U) and also DO NOT

RE-ADJUST PRESET CONTROL on the board. It is very dangerous to repair or adjust without proper test equipment because this circuit handles very high voltage and very large current. Off alignment of inverter board operation is dangerous. Operating a misaligned Inverter circuit is dangerous due to the very high voltage and current that is produced by this board. Defective boards must be replaced with a new one.

* Check magnetron filament for open or short to case before proceeding to determine a good magnetron.

12 EXPLODED VIEW AND PARTS LIST

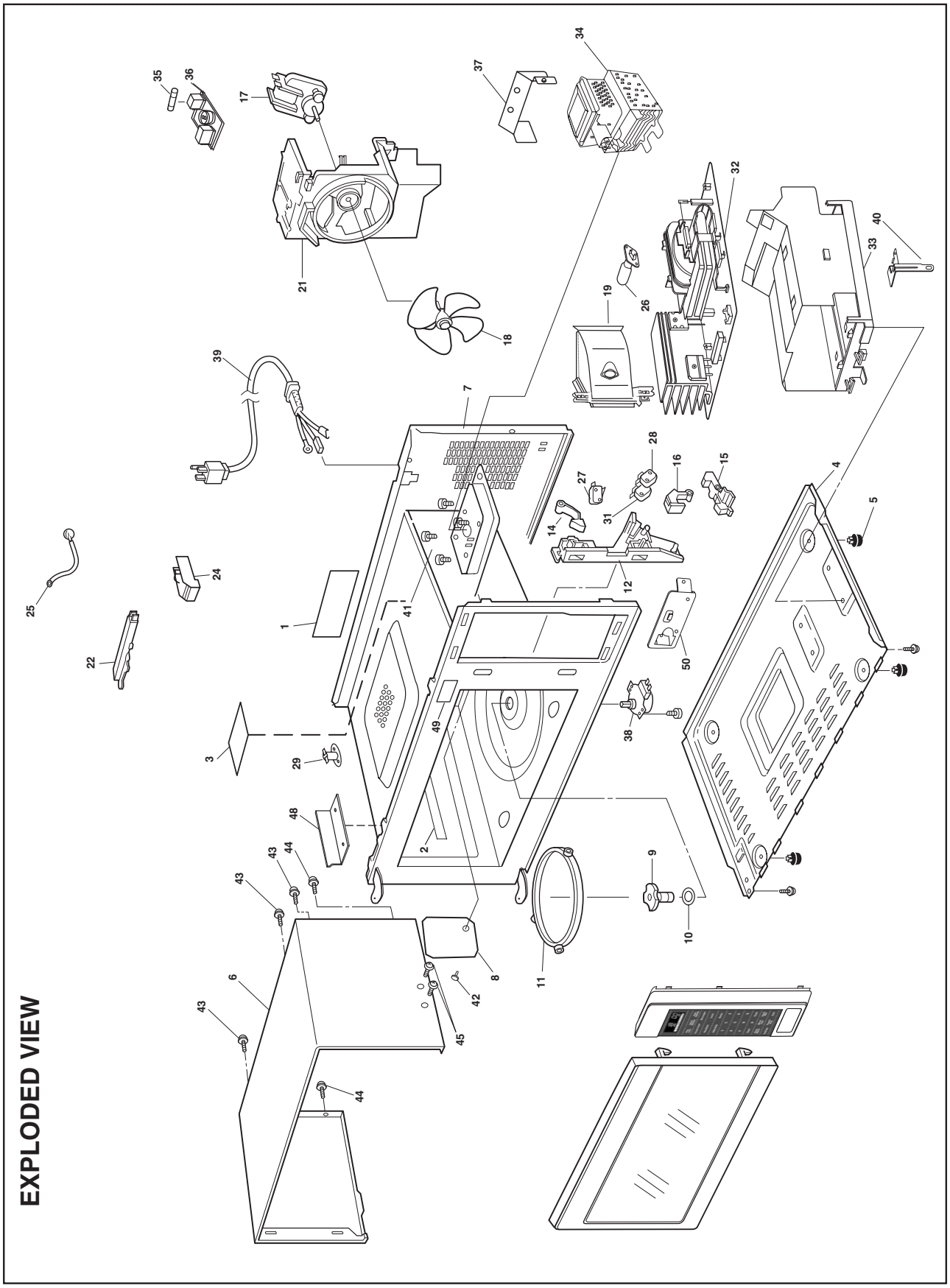

12.1. DOOR ASSEMBLY

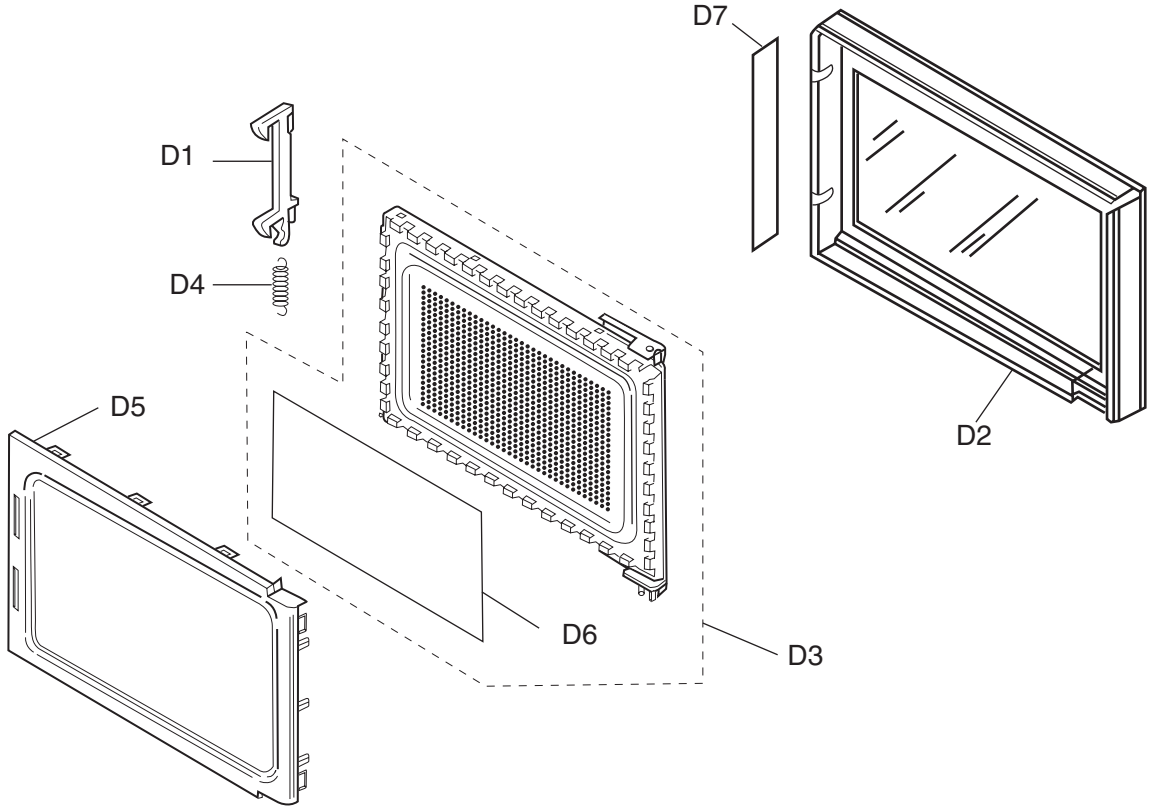

12.2. ESCUTCHEON BASE ASSEMBLY

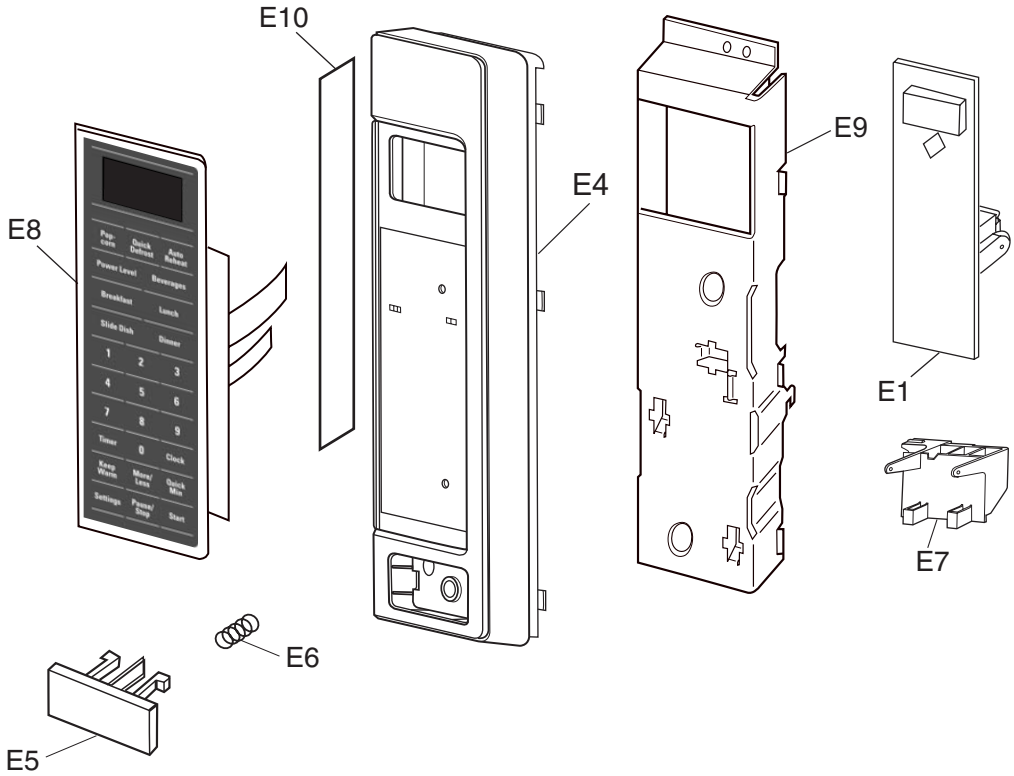

12.3. WIRING MATERIALS

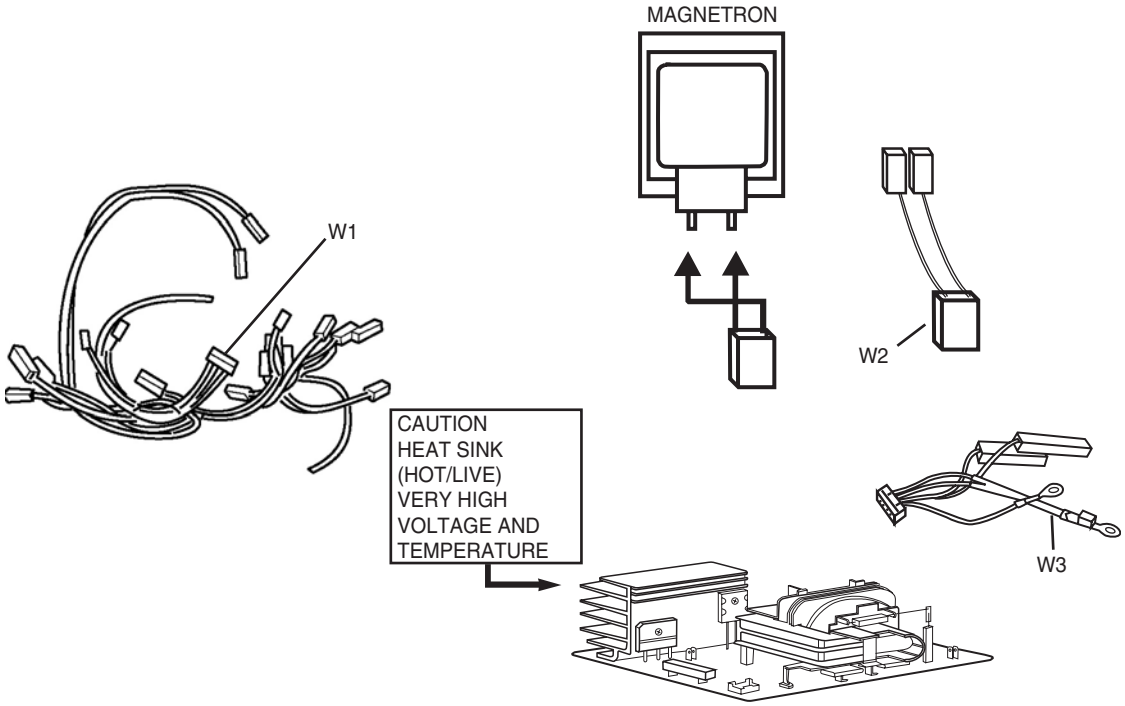
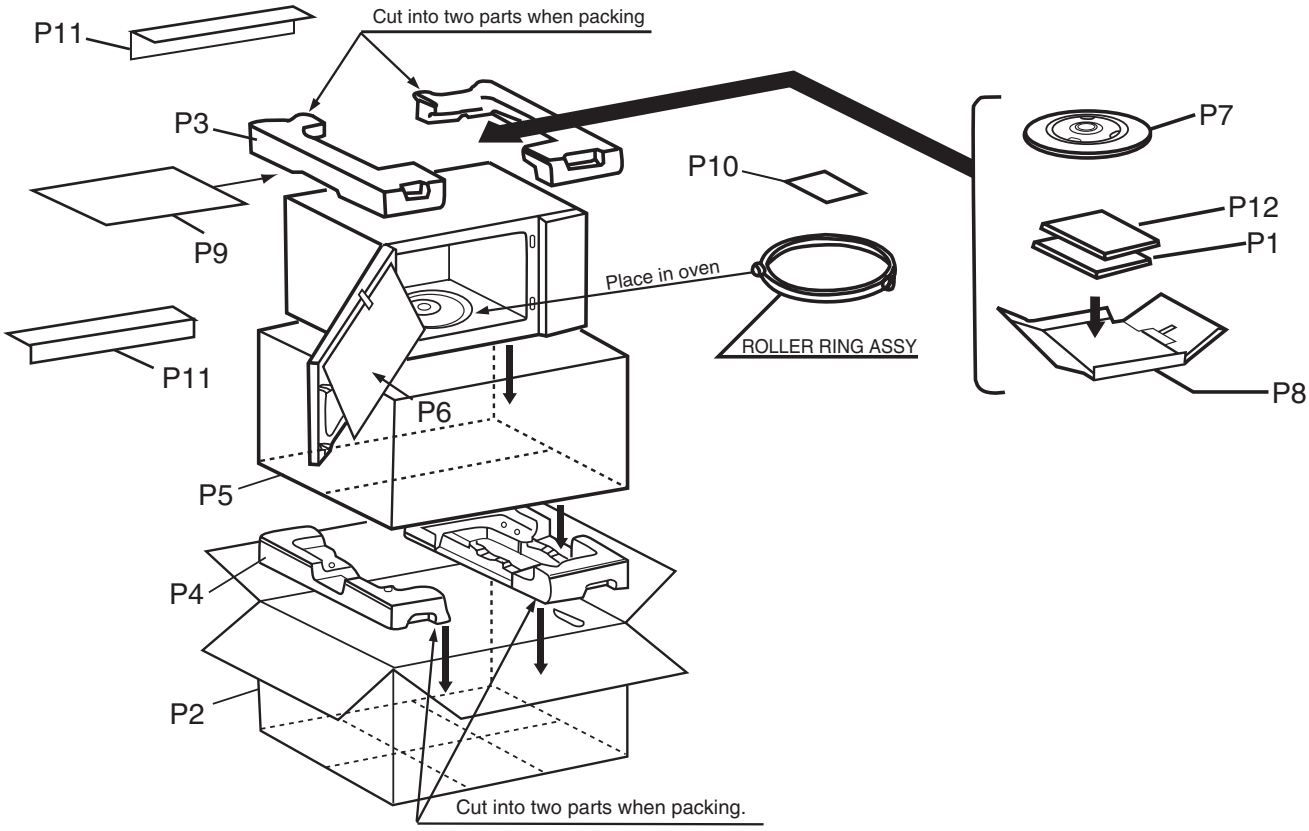
12.4. PACKING AND ACCESSORIES